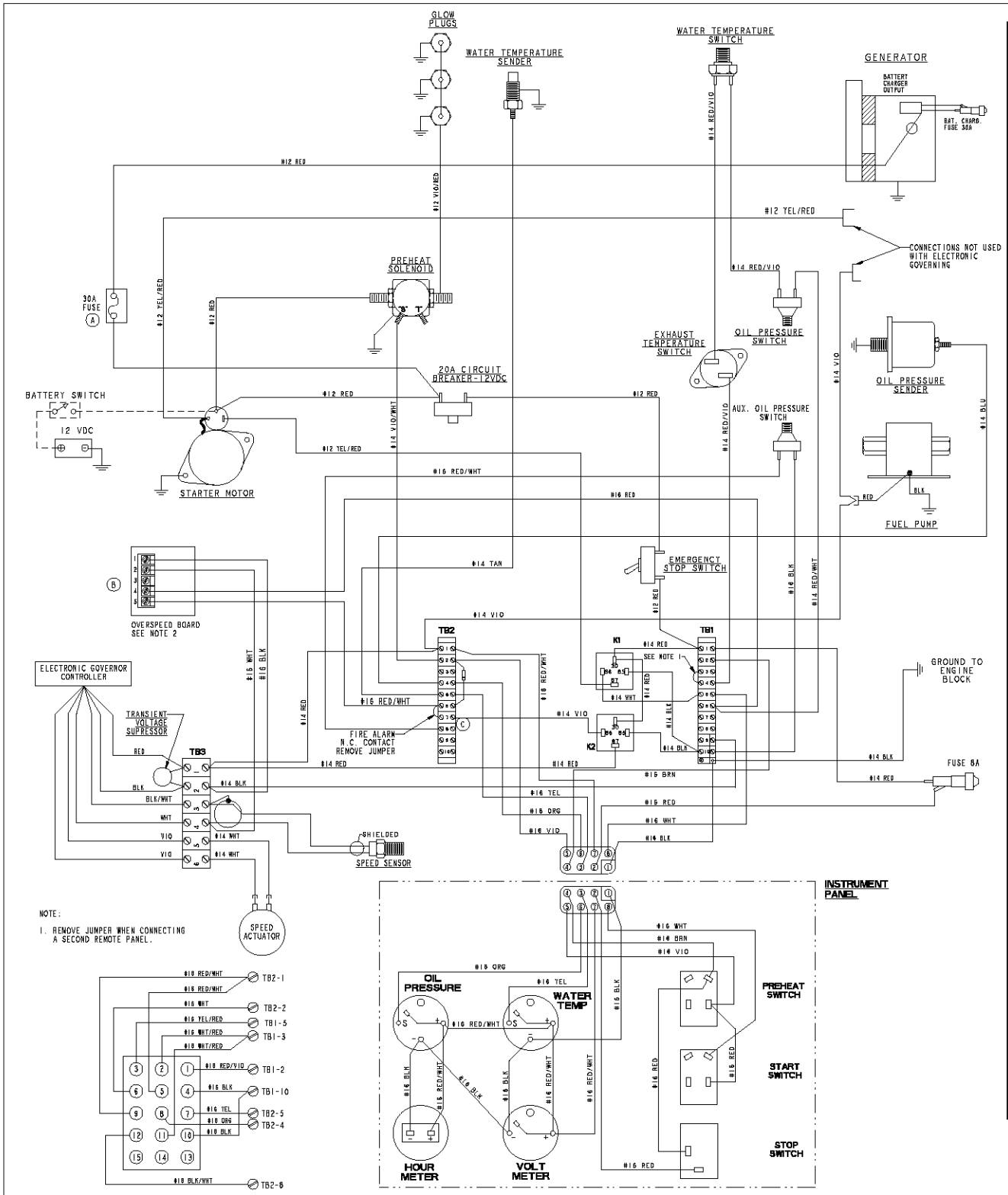

NOTE:

1. REMOVE JUMPER WHEN CONNECTING A SECOND REMOTE PANEL.

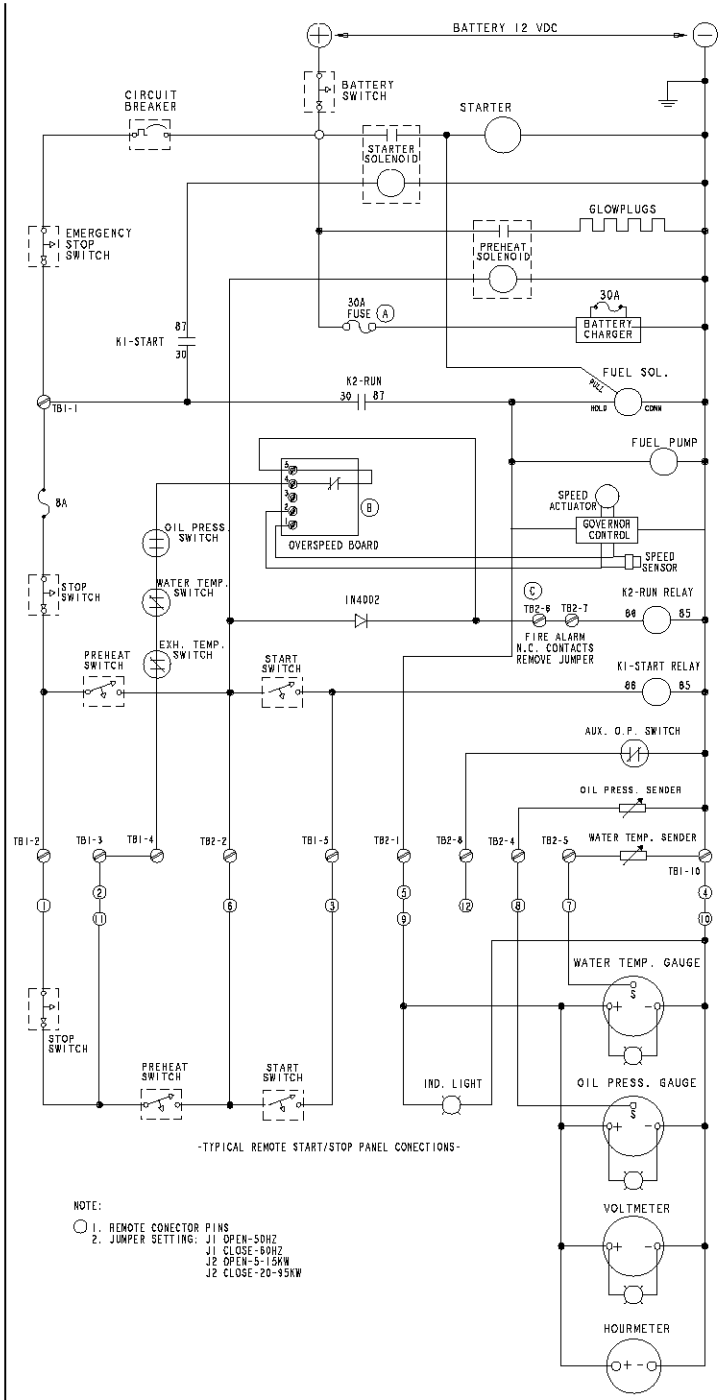

-TYPICAL REMOTE START/STOP PANEL CONECTIONS-

NOTE:

1. REMOTE CONECTOR PINS
2. JUMPER SETTING: J1 OPEN-50HZ
   J1 CLOSE-60HZ
   J2 OPEN-5-15KW
   J2 CLOSE-20-95KW

ECO NO.	DATE	REV.	REVISION RECORD	AUTH.	DR.BY
5861	11/2 04	C	ADDED JUMPER BETWEEN TB2-6&7. K2-86 WAS CONNECTED TO TB2-6.	GA	
5707	4-8 2004	B	ADD OVERSPEED BOARD	GA	
561D	8-17 2003	A	ADDED 30A FUSE TO BATTERY CHARGER CONNECTION. REROUTE BATTERY CHARGER CONNECTION TO STARTER INSTEAD OF CIRCUIT BREAKER	GA	

TOLERANCES (UNLESS OTHERWISE NOTED): INCHES / MILLIMETERS — DIMENSIONS: INCHES / MILLIMETERS — THICK APPLICABLE

WESTERBEKE CORPORATION
AVON MA. 02322

TITLE: WIRING DIAGRAM/SCHEMATIC, 5.0 BCDB - SRC W/ ELECT. GOV.

DRAWN BY: JH — DATE: 9 JAN 2001 — SUPERCEDES: - — APPROVED BY: — DATE: — SCALE: NONE — SHT. 1 of 1 — SIZE: E — DRAWING NUMBER: 45633 — REV: C